TEMPLATE NO.
SEA115.02

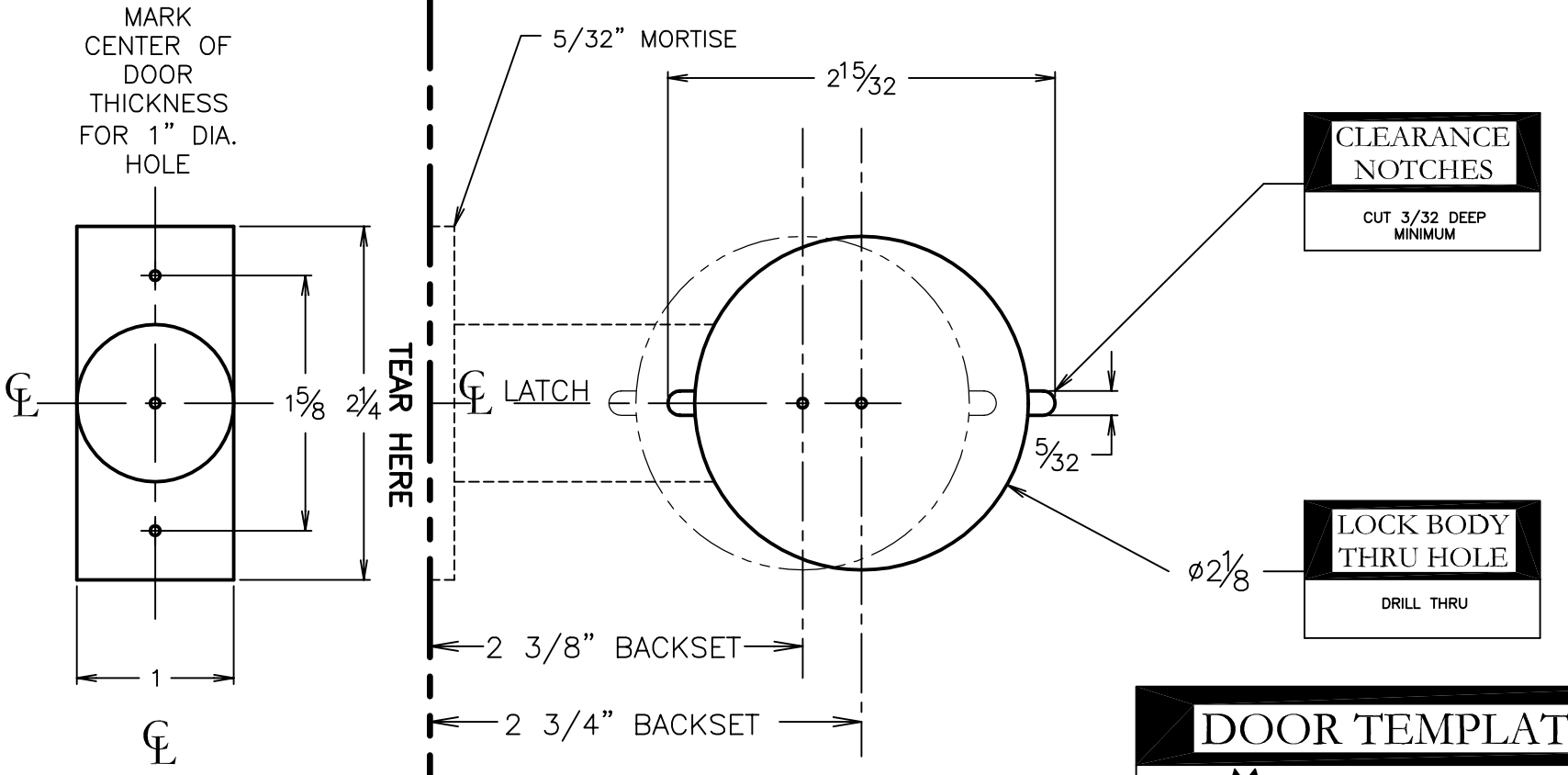

NOTE: ADJUST TEMPLATE FOR BEVELED DOORS

DOOR TEMPLATE

PDQ Manufacturing

DATE: 2-8-00

SE 115
ADJUSTABLE BACKSET
MAY NOT BE TO SCALE
PLEASE ENSURE THAT THIS IS THE MOST UP TO DATE TEMPLATE BY VISITING OUR WEBSITE AT WWW.PDQLOCKS.COM