TEMPLATE NO.
KVA125D.02

MARK CENTER OF DOOR THICKNESS FOR 1" DIA. HOLE

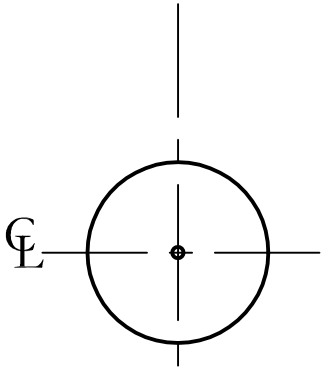

BOLT AND DOOR THICKNESS

TEAR HERE

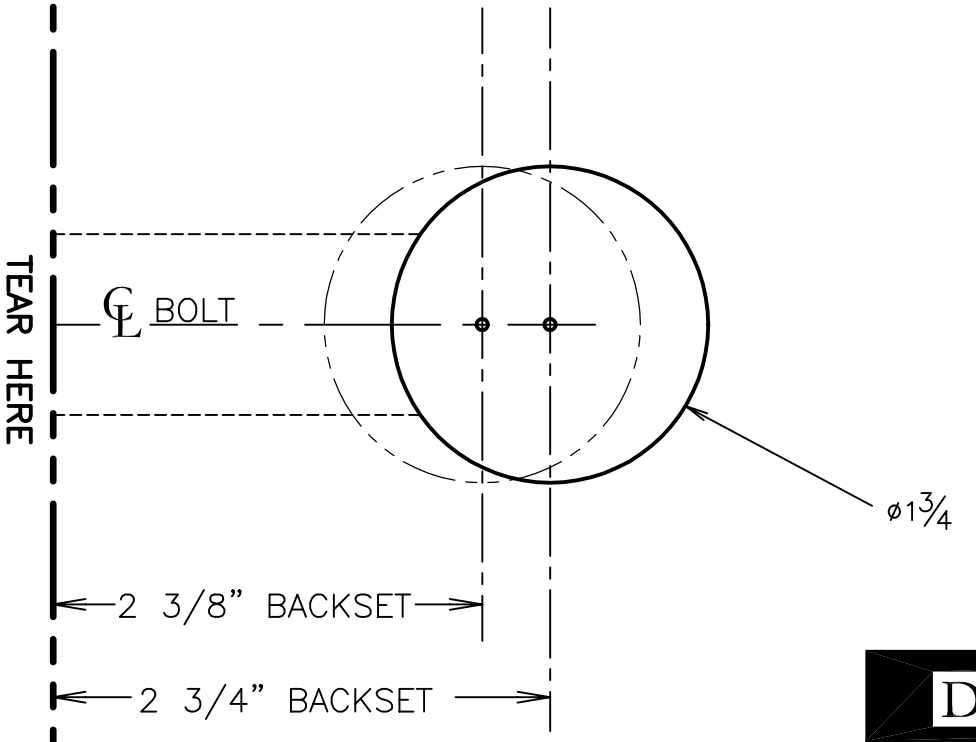

LOCK BODY HOLE

DRILL INSIDE OF DOOR ONLY

NOTE: ADJUST TEMPLATE FOR BEVELED DOORS

DOOR TEMPLATE

PDQ Manufacturing

DATE: 4-28-00

KV 125 DRIVE IN BOLT
ADJUSTABLE BACKSET

MAY NOT BE TO SCALE

PLEASE ENSURE THAT THIS IS THE MOST UP TO DATE TEMPLATE BY VISITING OUR WEBSITE AT WWW.PDQLOCKS.COM